ADTLINK

Product Name:Oculink SFF-8611 4 Lane Cable

Model Name: F9912 , F9934

	REV_A1	REV_B1	REV_A21	REV_B21	Shield-PAD
F9912	Open	Open	Open	Open	Shield-Shield
F9934	Short	Short	Short	Short	Short-GND

Rivision History

Date	Version	Description
2024May22	1.0	First Release

P/N: F9912

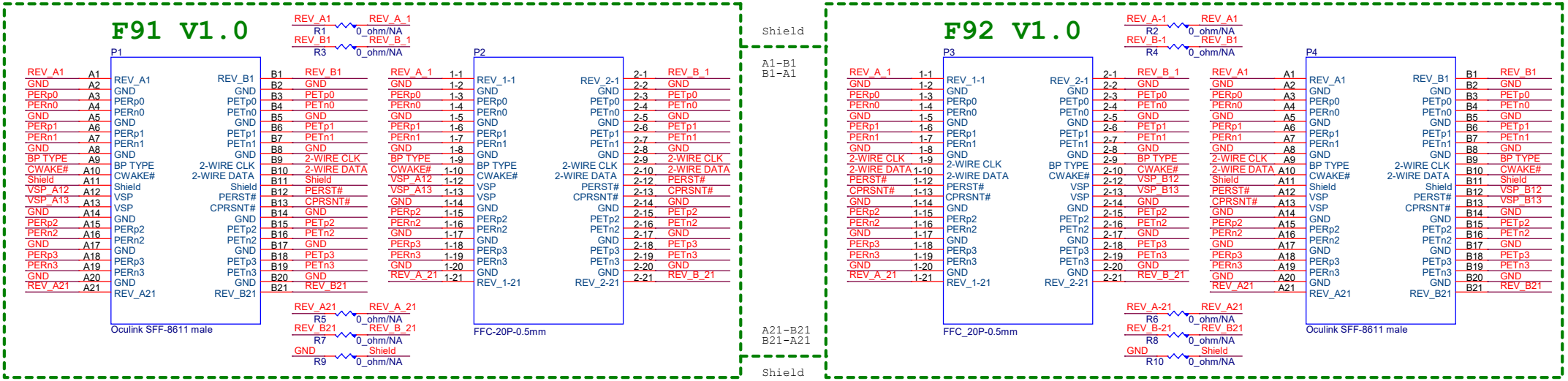
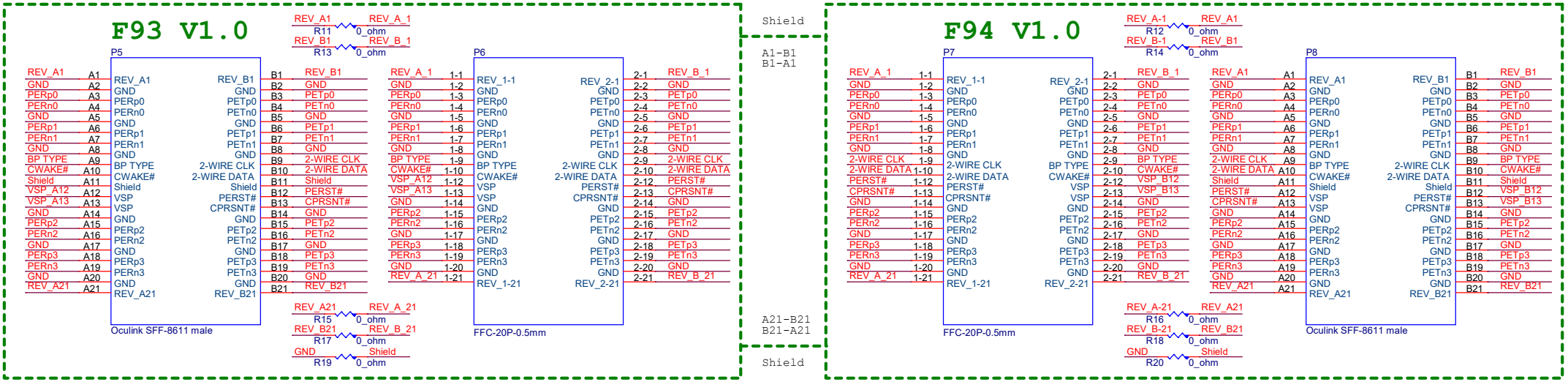
P/N: F9934