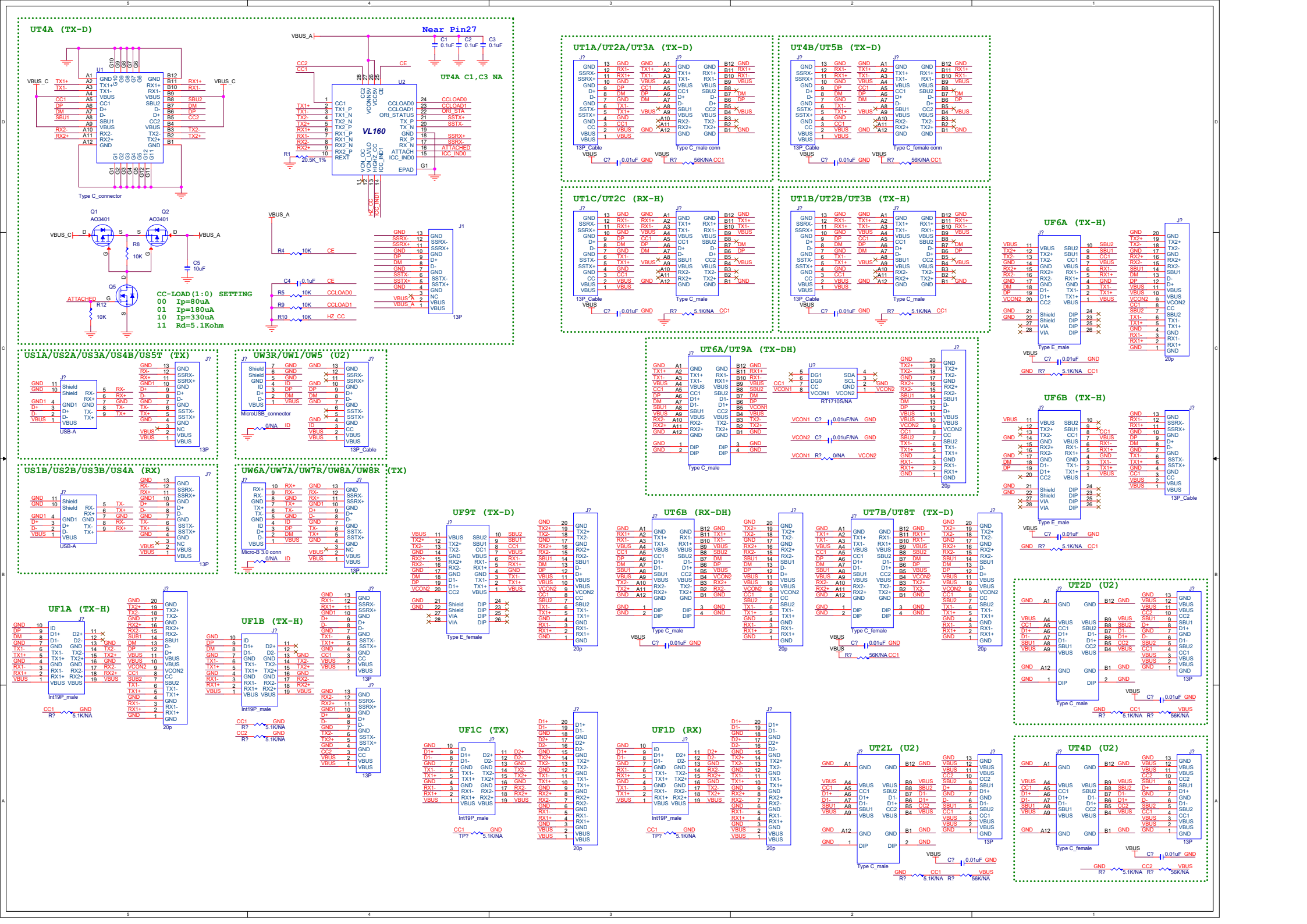
UT4A (TX-D)
Type C_connector
Near Pin27
UT4A C1,C3 NA
VL160
Q1 AO3401
Q2 AO3401
Q5
CC-LOAD(1:0) SETTING
00 Ip=80uA
01 Ip=180uA
10 Ip=330uA
11 Rd=5.1Kohm
UT1A/UT2A/UT3A (TX-D)
UT4B/UT5B (TX-D)
UT1C/UT2C (RX-H)
UT1B/UT2B/UT3B (TX-H)
UF6A (TX-H)
UT6A/UT9A (TX-DH)
RT1710S/NA
UF6B (TX-H)
US1A/US2A/US3A/US4B/US5T (TX)
UW3R/UW1/UW5 (U2)
US1B/US2B/US3B/US4A (RX)
UW6A/UW7A/UW7R/UW8A/UW8R (TX)
UF9T (TX-D)
UT6B (RX-DH)
UT7B/UT8T (TX-D)
UT2D (U2)
UF1A (TX-H)
UF1B (TX-H)
UF1C (TX)
UF1D (RX)
UT2L (U2)
UT4D (U2)

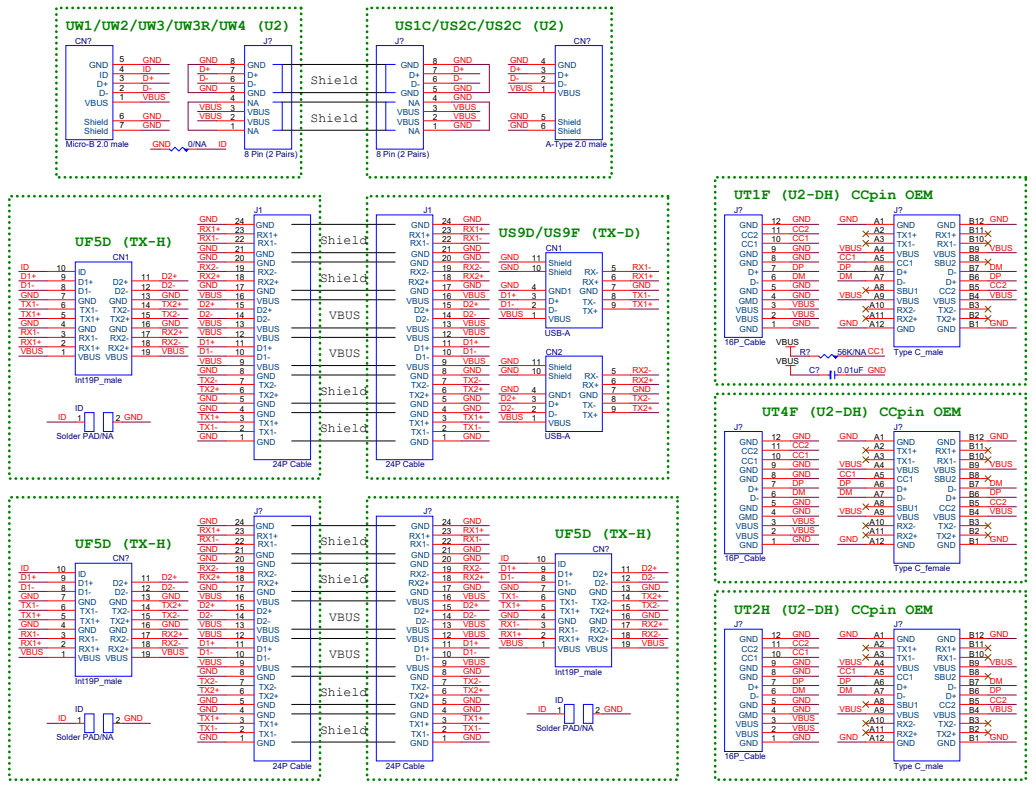
UW1/UW2/UW3/UW3R/UW4 (U2)
US1C/US2C/US2C (U2)
Micro-B 2.0 male
8 Pin (2 Pairs)
A-Type 2.0 male
Shield
UF5D (TX-H)
US9D/US9F (TX-D)
Int19P_male
USB-A
24P Cable
Solder PAD/NA
VBUS

UT1F (U2-DH) CCpin OEM
16P_Cable
Type C_male

UT4F (U2-DH) CCpin OEM
16P_Cable
Type C_female

UT2H (U2-DH) CCpin OEM
16P_Cable
Type C_male

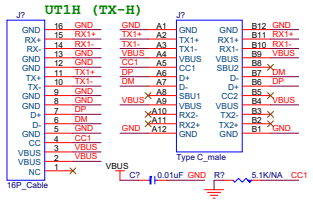
UT1H (TX-H)
16P_Cable
Type C_male

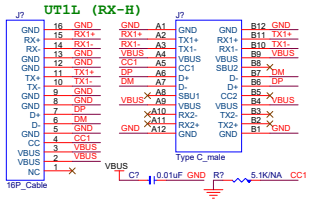
UT1L (RX-H)
16P_Cable
Type C_male

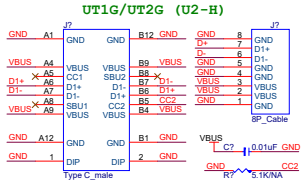
UT1G/UT2G (U2-H)
8P_Cable
Type C_male

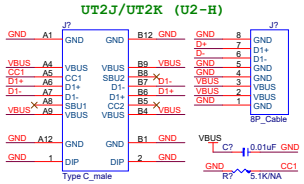
UT2J/UT2K (U2-H)
8P_Cable
Type C_male